Compact Large

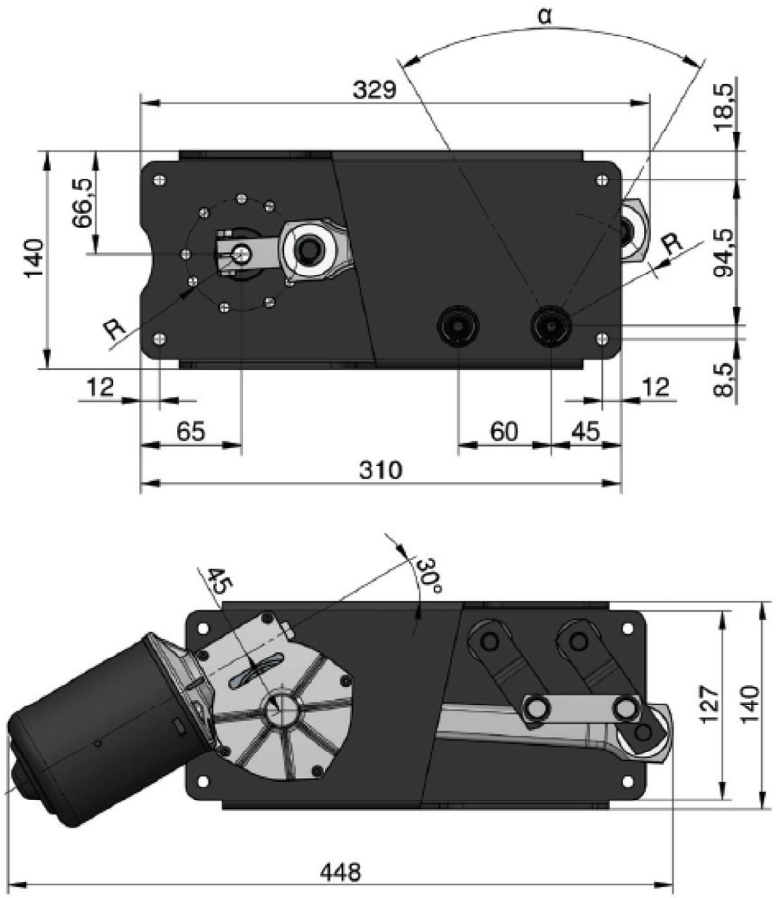

COMPLETE WIPER MECHANISM (LINKAGE + DC GEARMOTOR Ø90)

TECHNICAL DATA

DESCRIPTION	1 SPEED		2 SPEED	
Nominal voltage (V)	12V	24V	12V	24V
Testing voltage (V)	13,5V	27V	13,5V	27V
No load speed (RPM)	27		27/40	
Nominal torque (Nm)	7			
Starting torque (Nm)	55	65	55	65
Wiping angle (α)	60°, 70°, 72°, 84°			
Bushes length (L mm)	82, 102			
Weight (Kg)	6,5 Kg			
Max length of single arm + blade	Arm > 900mm Blade > 900mm			
Max length of pantograph arm + blade	Arm > 900mm Blade > 900mm			
Parking position	Left or Right			

DOWNLOAD
COMPACT LARGE
TECHNICAL SKETCH